Product Specification

AU OPTRONICS CORPORATION

(V) Preliminary Specifications
( ) Final Specifications

Module	13.3” HD Color TFT-LCD
Model Name	B133XW01 V2 (H/W:0A)
Note ( )	LED Backlight with driving circuit design

Customer	**Date**	**Approved by**	**Date**
		Bonnie Chen	4 th Mar, 2009
Checked & Approved by	**Date**	**Prepared by**	
		Vicki Chai	4 th Mar, 2009
Note: This Specification is subject to change without notice.		**NBBU Marketing Division / AU Optronics corporation**	

Contents

Record of Revision

Version and Date	Page	Old description	New Description	Remark
0.1 2008/10/31	All	First Edition for Customer		
0.2 2009/03/04	5	Power consumption = TBD	Power consumption = 4.8W max	
	5-6	Response time = 12ms max	Response time = 16ms max	
	6	Cross talk = TBD	Cross talk = 4%	
		Color spec = TBD	Color spec updated	
	15	P_{LED} = TBD	P_{LED} = 3.8W max	
	19	LED Power Supply 7V-20V	LED Power Supply 6V-21V	
	20	Rear view drawing	Rear view drawing updated	
	25	LED Power Supply 7V-20V	LED Power Supply 6V-21V	
	28-29	2D drawing	2D drawing updated	
	30-31	TBD	Shipping and packing updated	
	32-34	TBD	EDID added	

1. Handling Precautions

1) Since front polarizer is easily damaged, pay attention not to scratch it.
2) Be sure to turn off power supply when inserting or disconnecting from input connector.
3) Wipe off water drop immediately. Long contact with water may cause discoloration or spots.
4) When the panel surface is soiled, wipe it with absorbent cotton or other soft cloth.
5) Since the panel is made of glass, it may break or crack if dropped or bumped on hard surface.
6) Since CMOS LSI is used in this module, take care of static electricity and insure human earth when handling.
7) Do not open nor modify the Module Assembly.
8) Do not press the reflector sheet at the back of the module to any directions.
9) At the insertion or removal of the Signal Interface Connector, be sure not to rotate nor tilt the Interface Connector of the TFT Module.
10) After installation of the TFT Module into an enclosure (Notebook PC Bezel, for example), do not twist nor bend the TFT Module even momentary. At designing the enclosure, it should be taken into consideration that no bending/twisting forces are applied to the TFT Module from outside. Otherwise the TFT Module may be damaged.
11) Small amount of materials having no flammability grade is used in the LCD module. The LCD module should be supplied by power complied with requirements of Limited Power Source (IEC60950 or UL1950), or be applied exemption.
12) Disconnecting power supply before handling LCD modules, it can prevent electric shock, DO NOT TOUCH the electrode parts, cables, connectors and LED circuit part of TFT module that a LED light bar build in as a light source of back light unit. It can prevent electrostatic breakdown.

2. General Description

B133XW01 V2 is a Color Active Matrix Liquid Crystal Display composed of a TFT LCD panel, a driver circuit, and LED backlight system. The screen format is intended to support the High Definition (1366(H) x 768(V)) screen and 262k colors (RGB 6-bits data driver) with LED backlight driving circuit. All input signals are LVDS interface compatible.

B133XW01 V2 is designed for a display unit of notebook style personal computer and industrial machine.

2.1 General Specification

The following items are characteristics summary on the table at 25 □ condition:

Items	Unit	Specifications			
Screen Diagonal	[mm]	336.6 (13.25W")			
Active Area	[mm]	293.42 X 164.97			
Pixels H x V		1366x3(RGB) x 768			
Pixel Pitch	[mm]	0.2148X0.2148			
Pixel Format		R.G.B. Vertical Stripe			
Display Mode		Normally White			
White Luminance (I_{LED}=20mA) (Note: ILED is LED current)	[cd/m2]	220 typ. (5 points average) 187 min. (5 points average)			
Luminance Uniformity		1.25 max. (5 points)			
Contrast Ratio		500 typ			
Response Time	[ms]	8 typ / 16 Max			
Nominal Input Voltage VDD	[Volt]	+3.3 typ.			
Power Consumption	[Watt]	4.8W			
Weight	[Grams]	315 max.			
Physical Size	[mm]		L	W	T
		Max	306.8	193.83	3.8
		Typical	-	-	-
		Min	-	-	-
Electrical Interface		1 channel LVDS			
Glass thickness	[mm]	0.5			
Surface Treatment		Anti-fouling, Glare, Hardness 3H, Reflection 4.3%			

Support Color		262K colors (RGB 6-bit)
Temperature Range Operating Storage (Non-Operating)	 [oC] [oC]	 0 to +50 -20 to +60
RoHS Compliance		RoHS Compliance

2.2 Optical Characteristics

The optical characteristics are measured under stable conditions at 25 °C (Room Temperature) :

Item	Unit	Conditions	Min.	Typ.	Max.	Note
White Luminance (ILED=20mA)	**[cd/m]^2**	**5 points average**	**187**	**220**	**-**	1, 4, 5.
Viewing Angle	**[degree]** **[degree]**	**Horizontal (Right)** **CR = 10(Left)**	**-** **-**	**45** **45**	**-** **-**	4, 9
	[degree] **[degree]**	**Vertical (Upper)** **CR = 10 (Lower)** **5 Points**	**-** **-**	**15** **35**	**-** **-**	
Luminance Uniformity			**-**	**-**	**1.25**	1, 3, 4
		13 Points	**-**	**-**	**1.5**	2, 3, 4
CR: Contrast Ratio			**400**	**500**	**-**	4, 6
Cross talk	**%**				**4**	4, 7
Response Time	**[msec]**	**Rising + Falling**	**-**	**8**	**16**	
Chromaticity of color Coordinates (CIE 1931)		**Red x**	**0.555**	**0.585**	**0.615**	4, 9
		Red y	**0.305**	**0.335**	**0.365**	
		Green x	**0.300**	**0.330**	**0.360**	
		Green y	**0.545**	**0.575**	**0.605**	
		Blue x	**0.125**	**0.155**	**0.185**	
		Blue y	**0.100**	**0.130**	**0.160**	
		White x	**0.283**	**0.313**	**0.343**	
		White y	**0.299**	**0.329**	**0.359**	

Note 1: 5 points position (Ref: Active area)

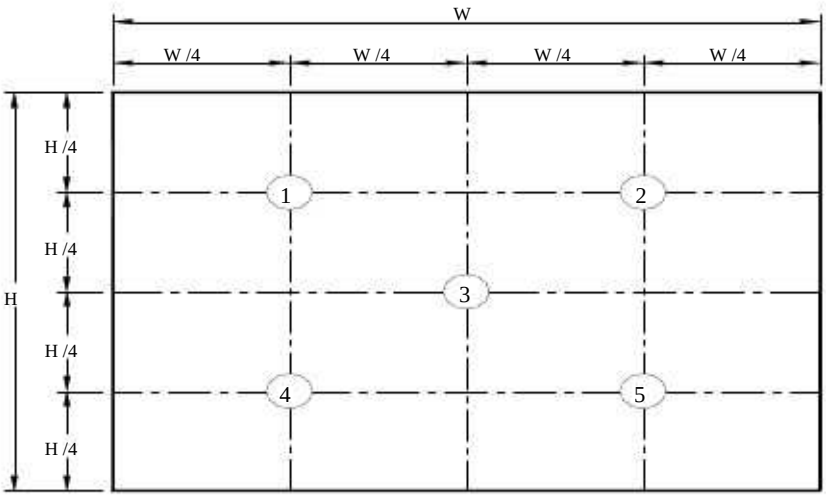

Note 2: 13 points position (Ref: Active area)

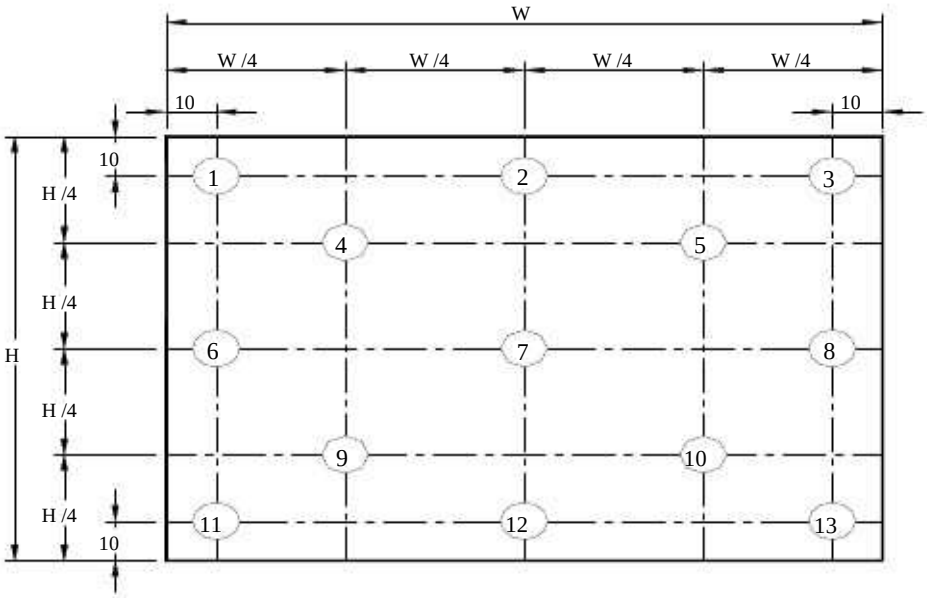

Note 3: The luminance uniformity of 5 or13 points is defined by dividing the maximum luminance values by the minimum test point luminance

$$\delta_{W5} = \frac{\text{Maximum Brightness of five points}}{\text{Minimum Brightness of five points}}$$

$$\delta_{W13} = \frac{\text{Maximum Brightness of thirteen points}}{\text{Minimum Brightness of thirteen points}}$$

Note 4: Measurement method

The LCD module should be stabilized at given temperature for 30 minutes to avoid abrupt temperature change during measuring. In order to stabilize the luminance, the measurement should be executed after lighting

Backlight for 30 minutes in a stable, windless and dark room.

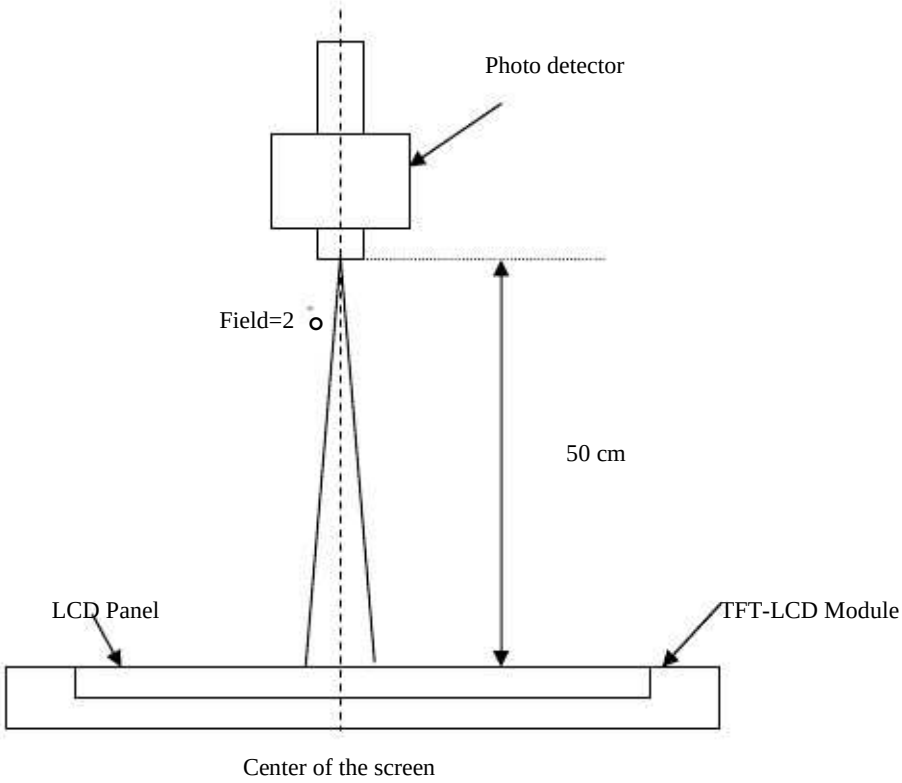

Note 5 : Definition of Average Luminance of White (Y_L):

Measure the luminance of gray level 63 at 5 points, $Y_L = [L(1)+L(2)+L(3)+L(4)+L(5)] / 5$

L (x) is corresponding to the luminance of the point X at Figure in Note (1).

Note 6 : Definition of contrast ratio:

Contrast ratio is calculated with the following formula.

$$\text{Contrast ratio (CR)} = \frac{\text{Brightness on the “White” state}}{\text{Brightness on the “Black” state}}$$

Note 7 : Definition of Cross Talk (CT)

$CT = |Y_B - Y_A| / Y_A \times 100$ (%)

Where

Y_A = Luminance of measured location without gray level 0 pattern (cd/m2)

Y_B = Luminance of measured location with gray level 0 pattern (cd/m2)

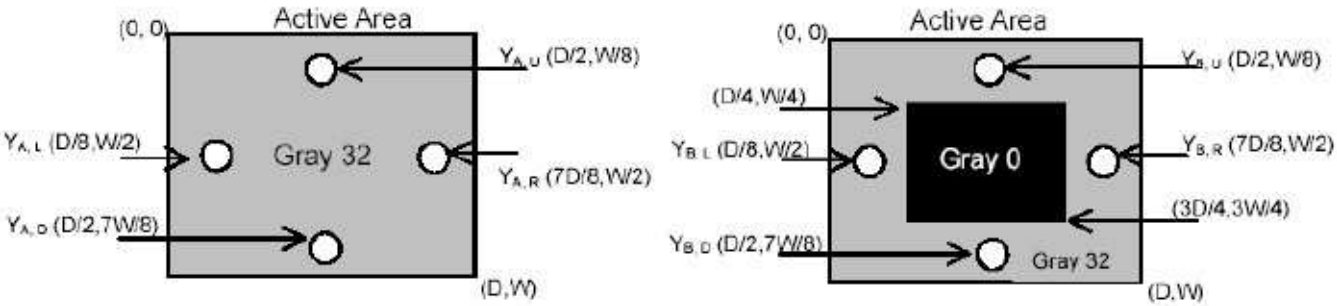

Note 8: Definition of response time:

The output signals of BM-7 or equivalent are measured when the input signals are changed from “Black” to “White” (falling time) and from “White” to “Black” (rising time), respectively. The response time interval between the 10% and 90% of amplitudes. Refer to figure as below.

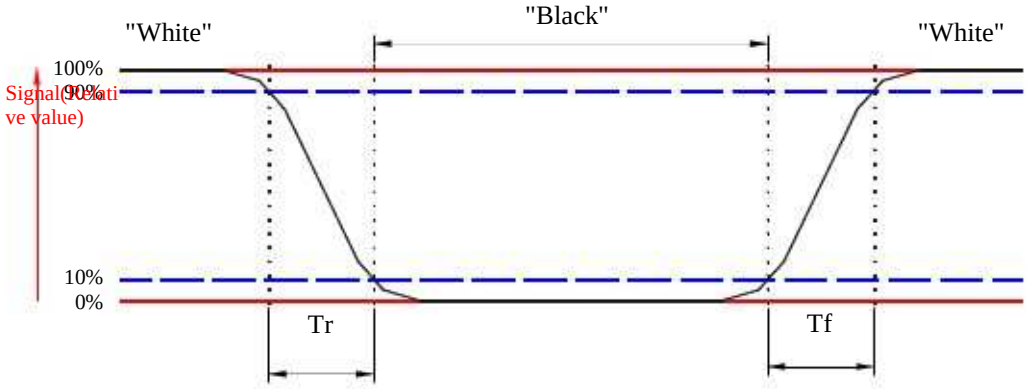

Note 9. Definition of viewing angle

Viewing angle is the measurement of contrast ratio ≧10, at the screen center, over a 180° horizontal and 180° vertical range (off-normal viewing angles). The 180° viewing angle range is broken down as follows; 90° (θ) horizontal left and right and 90° (Φ) vertical, high (up) and low (down). The measurement direction is typically perpendicular to the display surface with the screen rotated about its center to develop the desired measurement viewing angle.

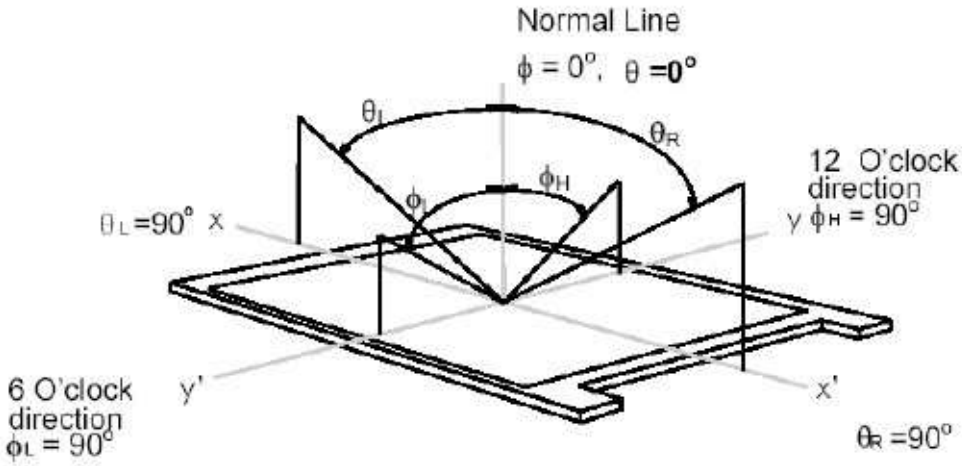

3. Functional Block Diagram

The following diagram shows the functional block of the 13.3 inches wide Color TFT/LCD Module:

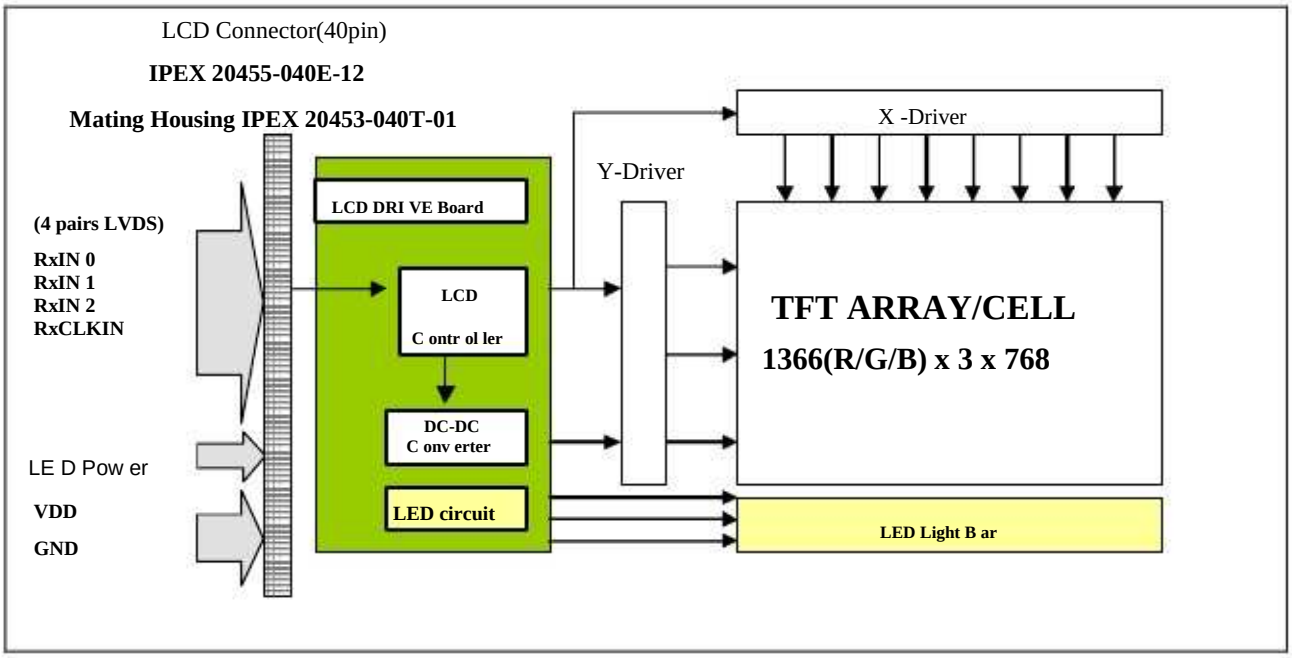

4. Absolute Maximum Ratings

An absolute maximum rating of the module is as following:

4.1 Absolute Ratings of TFT LCD Module

Item	Symbol	Min	Max	Unit	Conditions
Logic/LCD Drive Voltage	Vin	-0.3	+4.0	[Volt]	Note 1,2

4.2 Absolute Ratings of Environment

Item	Symbol	Min	Max	Unit	Conditions
Operating Temperature	TOP	0	+50	[°C]	Note 4
Operation Humidity	HOP	10	90	[%RH]	Note 4
Storage Temperature	TST	-20	+60	[°C]	Note 4
Storage Humidity	HST	10	90	[%RH]	Note 4

Note 1: At Ta (25 ℃)

Note 2: Permanent damage to the device may occur if exceed maximum values

Note 3: LED specification refer to section 5.2

Note 4: For quality performance, please refer to AUO IIS (Incoming Inspection Standard).

5. Electrical characteristics

5.1 TFT LCD Module

5.1.1 Power Specification

Input power specifications are as follows;

Symble	Parameter	Min	Typ	Max	Units	Note
VDD	Logic/LCD Drive Voltage	3.0	3.3	3.6	[Volt]	
PDD	VDD Power	-	-	0.9	[Watt]	Note 1/2
IDD	IDD Current	-	-	300	[mA]	Note 1/2
IRush	Inrush Current	-	-	2000 [mA]		Note 3
VDDrp	Allowable Logic/LCD Drive Ripple Voltage	-	-	100	[mV] p-p	

Note 1 : Maximum Measurement Condition : Black Pattern

Note 2 : Typical Measurement Condition: Mosaic Pattern

Note 3 : Measure Condition

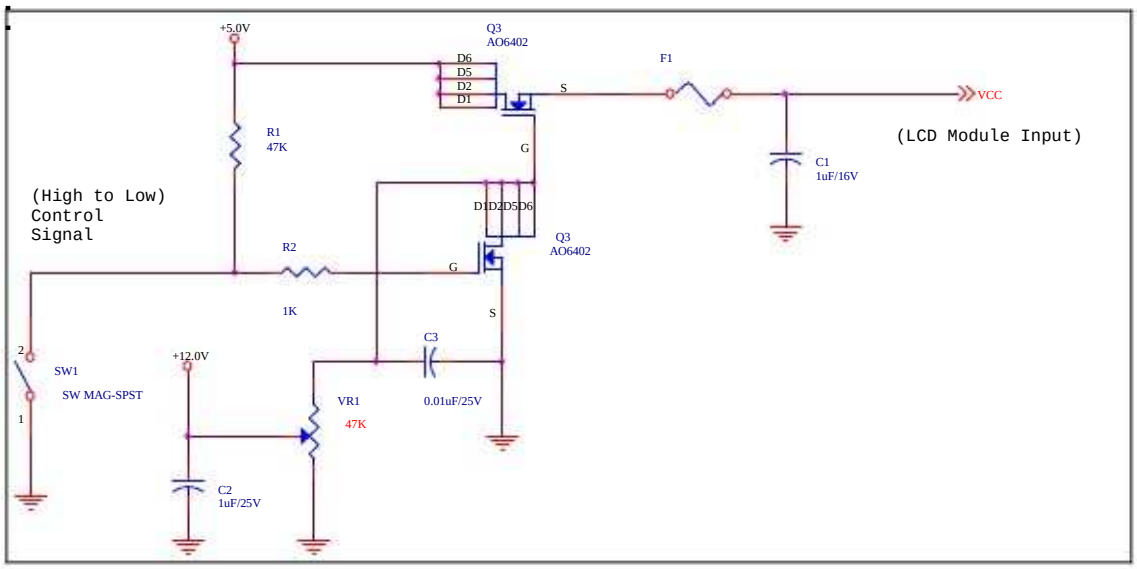

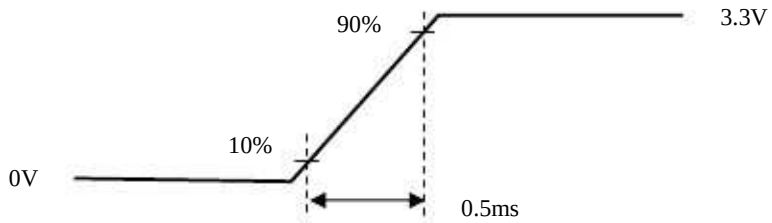

Vin rising time

5.1.2 Signal Electrical Characteristics

Input signals shall be low or High-impedance state when VDD is off.
It is recommended to refer the specifications of THC63LVDF84A (Thine Electronics Inc.) in detail.

Signal electrical characteristics are as follows;

Parameter	Condition	Min	Max	Unit
Vth	Differential Input High Threshold (Vcm=+1.2V)	-	100	[mV]
Vtl	Differential Input Low Threshold (Vcm=+1.2V)	-100	-	[mV]
Vcm	Differential Input Common Mode Voltage	1.125	1.375	[V]

Note: LVDS Signal Waveform

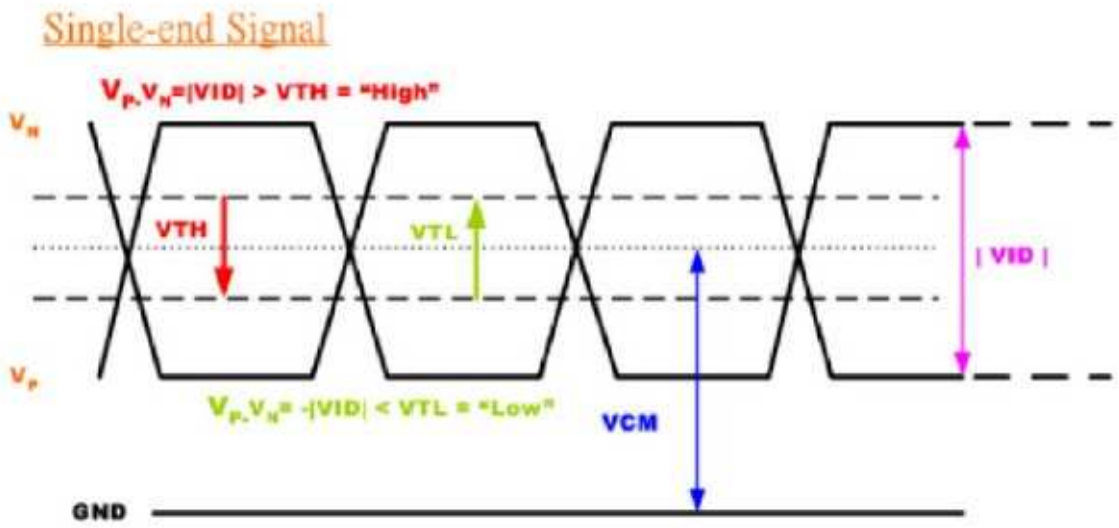

5.2 Backlight Unit

LED Parameter guideline for LED driving selection

Parameter	Symbol	Min	Typ	Max	Units	Condition
LED Forward Voltage	V_F	3.0	3.2	3.4	[Volt]	(Ta=25 ℃)
LED Forward Current	I_F	-	20	30	[mA]	(Ta=25 ℃)
LED Power consumption	P_{LED}	-	-	3.8	[Watt]	(Ta=25) ℃ Note 1
LED Life-Time	N/A	10000	-	-	Hour	(Ta=25 ℃) I_F=20 mA Note 2
Output PWM frequency	F_{PWM}	100	200	20K	Hz	
Duty ratio	--	5	--	100	%	

Note 1: Calculator value for reference $P_{LED} = I_F \times V_F \times$ LED(Qty)

Note 2: The LED life-time define as the estimated time to 50% degradation of minimum specification luminance.

6. Signal Characteristic

6.1 Pixel Format Image

Following figure shows the relationship of the input signals and LCD pixel format.

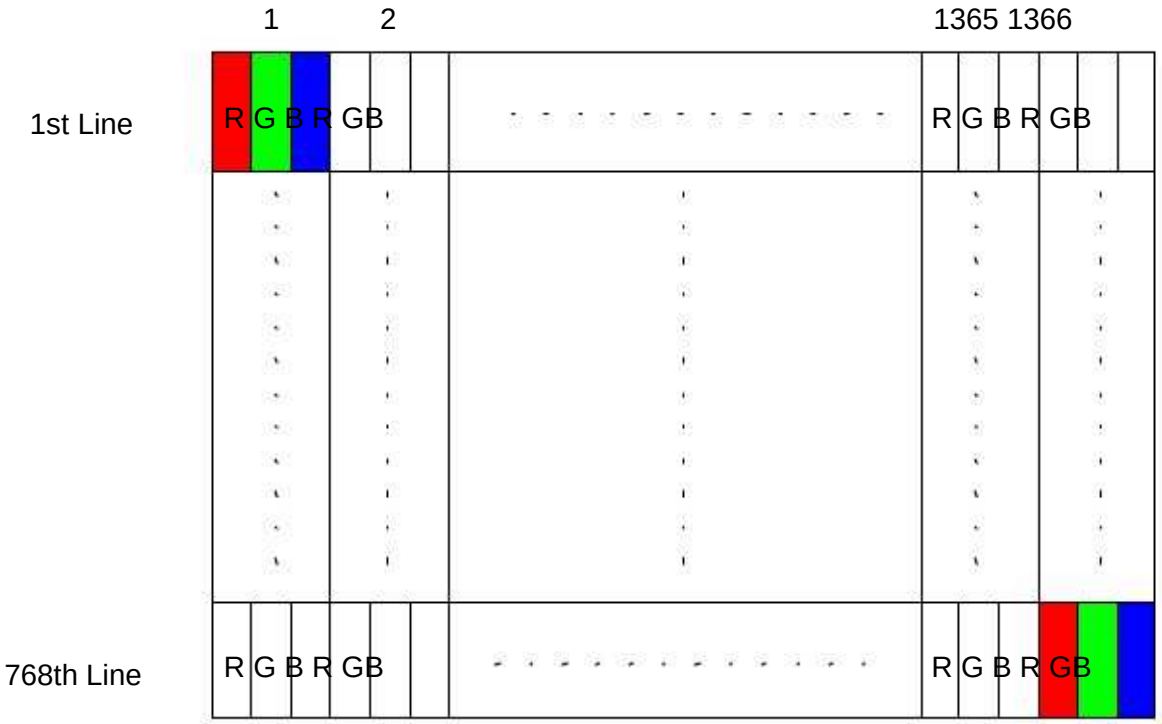

6.2 The input data format

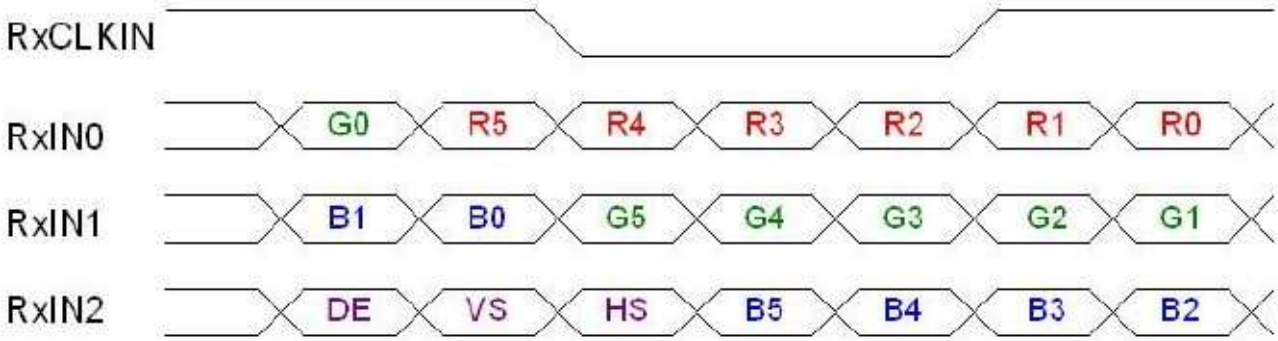

Signal Name	Description	
R5 R4 R3 R2 R1 R0	Red Data 5 (MSB) Red Data 4 Red Data 3 Red Data 2 Red Data 1 Red Data 0 (LSB) Red-pixel Data	Red-pixel Data Each red pixel's brightness data consists of these 6 bits pixel data.
G5 G4 G3 G2 G1 G0	Green Data 5 (MSB) Green Data 4 Green Data 3 Green Data 2 Green Data 1 Green Data 0 (LSB) Green-pixel Data	Green-pixel Data Each green pixel's brightness data consists of these 6 bits pixel data.
B5 B4 B3 B2 B1 B0	Blue Data 5 (MSB) Blue Data 4 Blue Data 3 Blue Data 2 Blue Data 1 Blue Data 0 (LSB) Blue-pixel Data	Blue-pixel Data Each blue pixel's brightness data consists of these 6 bits pixel data.
RxCLKIN	Data Clock	The typical frequency is 72 MHZ.. The signal is used to strobe the pixel data and DE signals. All pixel data shall be valid at the falling edge when the DE signal is high.
DE	Display Timing	This signal is strobed at the falling edge of RxCLKIN. When the signal is high, the pixel data shall be valid to be displayed. The signal is synchronized to RxCLKIN .
VS	Vertical Sync	The signal is synchronized to RxCLKIN .
HS	Horizontal Sync	

Note: Output signals from any system shall be low or High-impedance state when VDD is off.

6.3 Integration Interface and Pin Assignment

LVDS is a differential signal technology for LCD interface and high speed data transfer device.

PIN#	Signal Name	Description
1	NC	No Connection (Reserve)
2	AVDD	PowerSupply,3.3V(typical)
3	AVDD	PowerSupply,3.3V(typical)
4	DVDD	DDC 3.3Vpower
5	NC	No Connection (Reserve)
6	SCL	DDC Clock
7	SDA	DDC Data
8	Rin0-	-LVDS differential data input(R0-R5,G0)
9	Rin0+	+LVDS differential data input(R0-R5,G0)
10	GND	Ground
11	Rin1-	-LVDS differential data input(G1-G5,B0-B1)
12	Rin1+	+LVDS differential data input(G1-G5,B0-B1)
13	GND	Ground
14	Rin2-	-LVDS differential data input(B2-B5,HS,VS,DE)
15	Rin2+	+LVDS differential data input(B2-B5,HS,VS,DE)
16	GND	Ground
17	ClkIN-	-LVDS differential clock input
18	ClkIN+	+LVDS differential clock input
19	GND	Ground–Shield
20	NC	No Connection (Reserve)
21	NC	No Connection (Reserve)
22	GND	Ground–Shield
23	NC	No Connection (Reserve)
24	NC	No Connection (Reserve)
25	GND	Ground–Shield
26	NC	No Connection (Reserve)
27	NC	No Connection (Reserve)
28	GND	Ground–Shield
29	NC	No Connection (Reserve)
30	NC	No Connection (Reserve)
31	VLED_GND	LED Ground
32	VLED_GND	LED Ground
33	VLED_GND	LED Ground
34	NC	No Connection (Reserve)

35	PWM	System PWM Signal Input
36	LED_EN	LED enable pin(+3V Input)
37	NC	No Connection (Reserve)
38	VLED	LED Power Supply 6V-21V
39	VLED	LED Power Supply 6V-21V
40	VLED	LED Power Supply 6V-21V

Note1: Viewing from rear of the module

Note2: Start from right side

Note3: Input signals shall be low or High-impedance state when VDD is off.

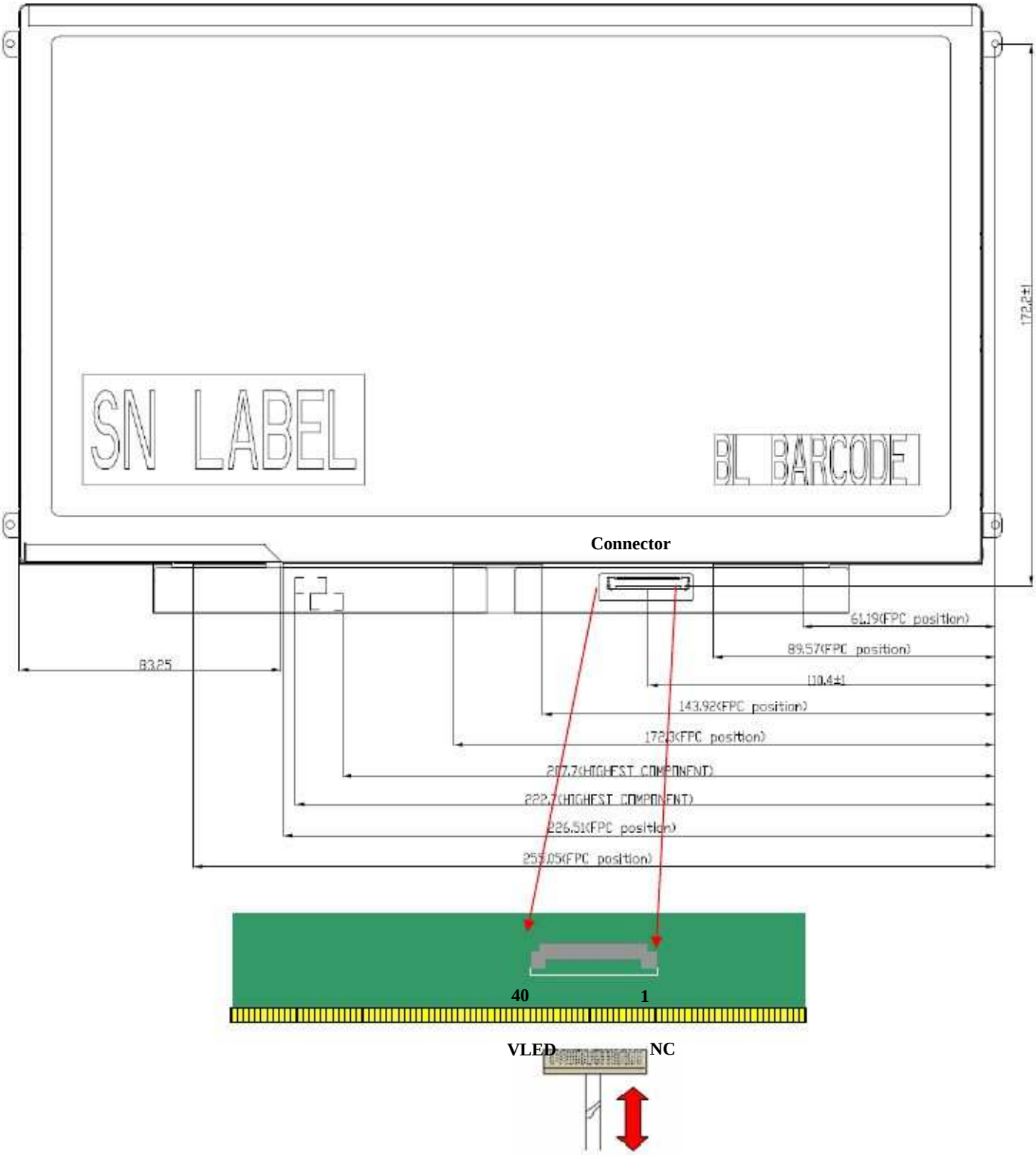

Internal circuit of LVDS inputs are as following.
The module uses a 100ohm resistor between positive and negative data lines of each receiver input

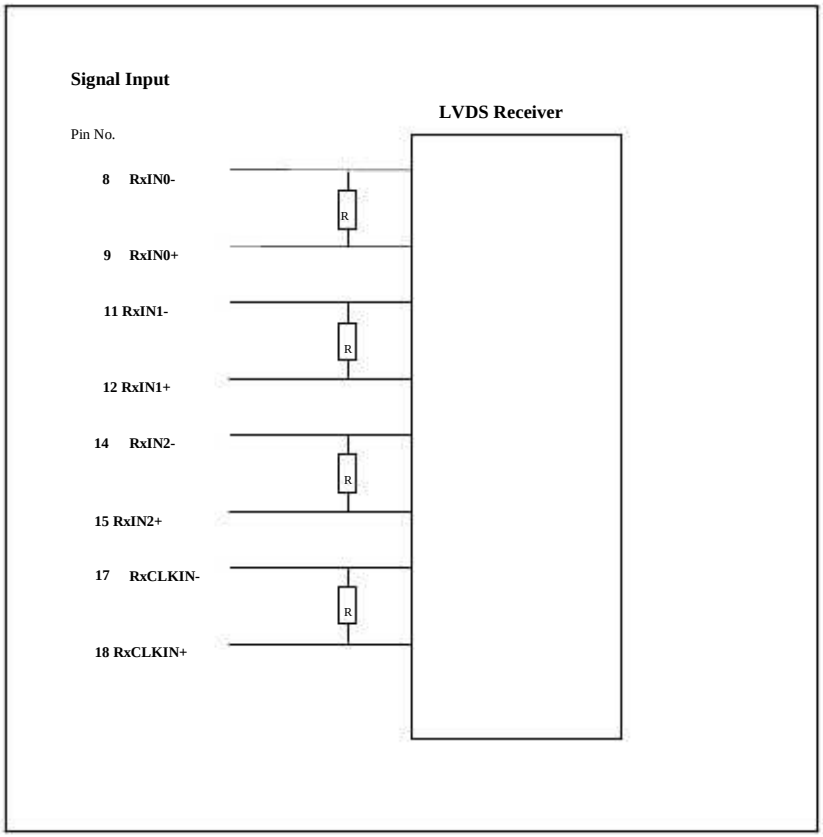

6.4 Interface Timing

6.4.1 Timing Characteristics

Basically, interface timings should match the 1366x768 /60Hz manufacturing guide line timing.

Parameter		Symbol	Min.	Typ.	Max.	Unit
Frame Rate		-	50	60	-	Hz
Clock frequency		1/ T_{Clock}	-	72	-	MHz
Vertical Section	Period	T_V	780	803	-	T_{Line}
	Active	T_{VD}		768	-	
	Blanking	T_{VB}	12	35	-	
Horizontal Section	Period	T_H	1426	1494	-	T_{Clock}
	Active	T_{HD}	-	1366	-	
	Blanking	T_{HB}	60	128	-	

Note : DE mode only

6.4.2 Timing diagram

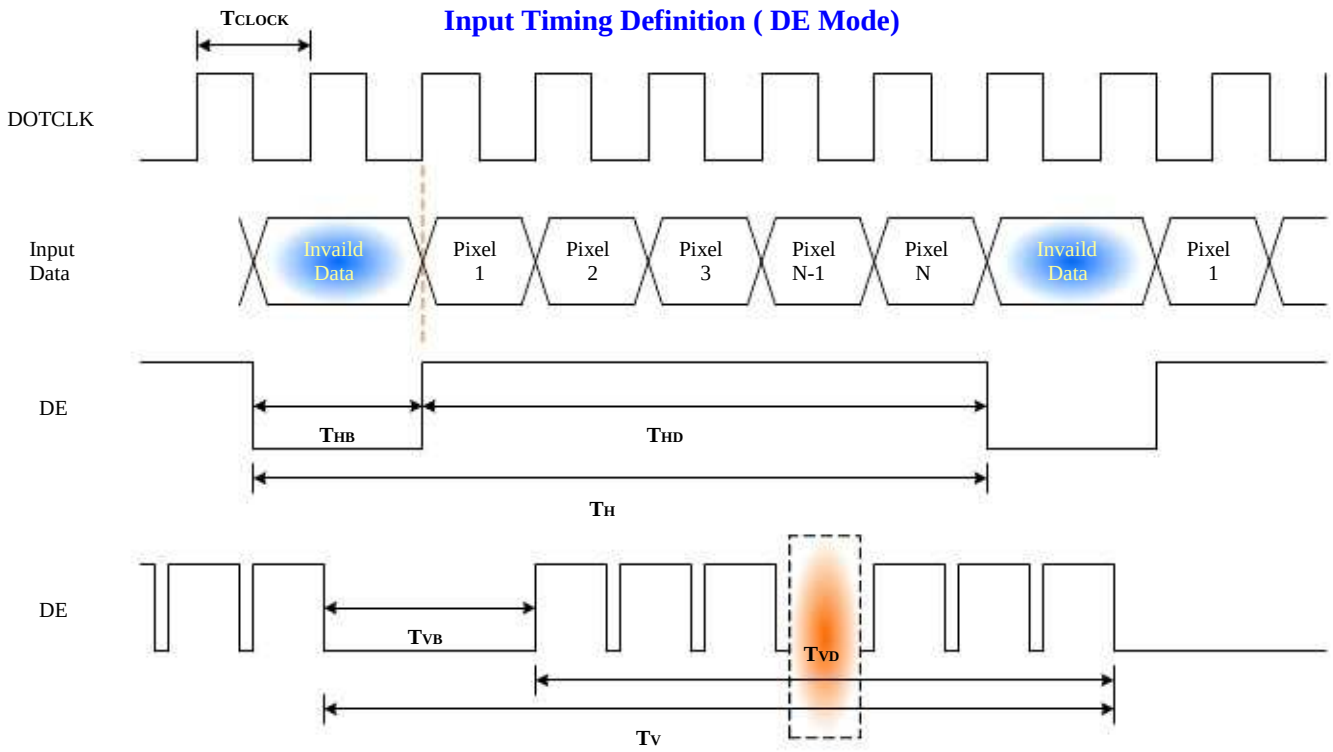

6.5 Power ON/OFF Sequence

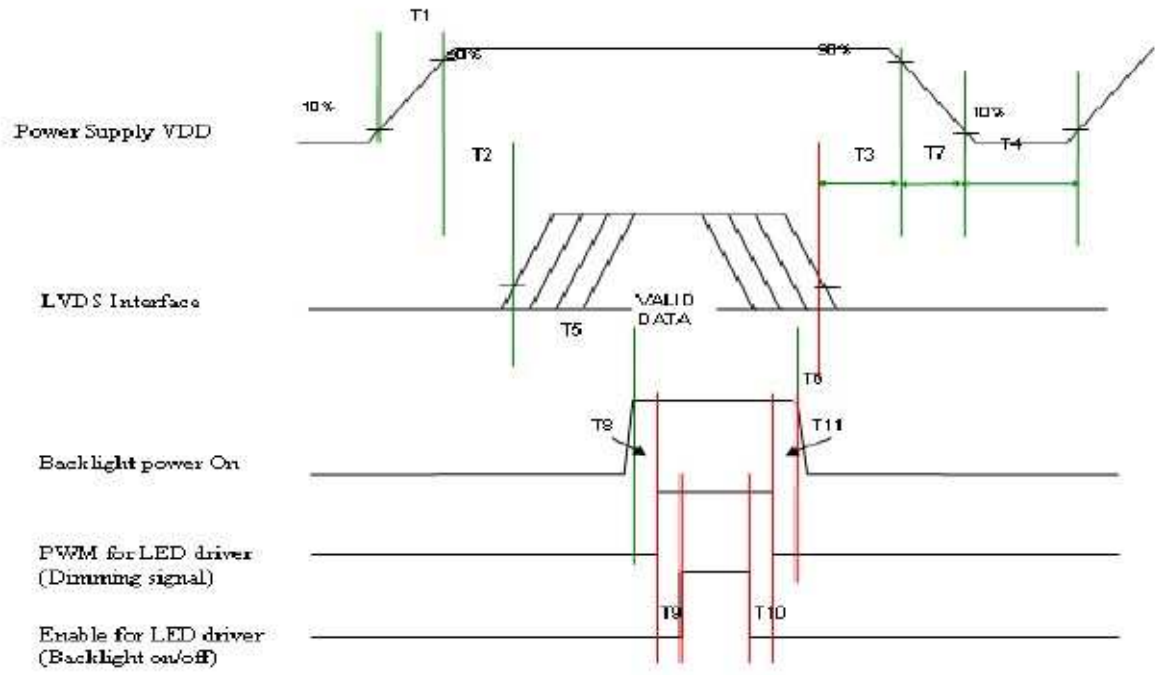

Parameter	Value			Units
	Min.	Typ.	Max.	
T1	0.5	-	10	(ms)
T2	5	-	50	(ms)
T3	0.5	-	50	(ms)
T4	400	-	-	(ms)
T5	200	-	-	(ms)
T6	200	-	-	(ms)
T7	0	-	10	(ms)
T8	10	---	---	(ms)
T9	10	---	---	(ms)
T10	0	---	---	(ms)
T11	10	---	---	(ms)

7. Connector Description

Physical interface is described as for the connector on module.

These connectors are capable of accommodating the following signals and will be following components.

7.1 TFT LCD Module

Connector Name / Designation	**For Signal Connector**
Manufacturer	IPEX or compatible
Type / Part Number	**IPEX 20455-040E-12** or compatible
Mating Housing/Part Number	**IPEX 20453-040T-01** or compatible

8. LED Driving Specification

8.1 Connector Description

It is a intergrative interface and comibe into LVDS connector. The type and mating refer to section 7.

8.2 Pin Assignment

PIN#	Signal Name	Description
31	VLED_GND	LED Ground
32	VLED_GND	LED Ground
33	VLED_GND	LED Ground
34	NC	No Connection (Reserve)
35	PWM	System PWM Signal Input
36	LED_EN	LED enable pin(+3V Input)
37	NC	No Connection (Reserve)
38	VLED	LED Power Supply 6V-21V
39	VLED	LED Power Supply 6V-21V
40	VLED	LED Power Supply 6V-21V

9. Vibration and Shock Test

9.1 Vibration Test

Test Spec:

Test method:	Non-Operation
Acceleration:	1.5 G
Frequency:	10 - 500Hz Random
Sweep:	30 Minutes each Axis (X, Y, Z)

9.2 Shock Test Spec:

Test Spec:

Test method:	Non-Operation
Acceleration:	220 G , Half sine wave
Active time:	2 ms
Pulse:	X,Y,Z .one time for each side

10. Reliability

Items	Required Condition	Note
Temperature Humidity Bias	Ta= 40□, 90%RH, 300h□	
High Temperature Operation	Ta= 50□, Dry, 300h□	
Low Temperature Operation	Ta= 0□, 300h□	
High Temperature Storage	Ta= 60□, 300h□	
Low Temperature Storage	Ta= -20□, 300h□	
Thermal Shock Test	Ta=-20□to 60□, Duration at 30 min, 100 cycles□□	
ESD	Contact : ±8 KV Air : ±15 KV	Note 1

Note1: According to EN 61000-4-2 , ESD class B: Some performance degradation allowed. No data lost

. Self-recoverable. No hardware failures.

Remark: MTBF (Excluding the LED): 30,000 hours with a confidence level 90%

11. Mechanical Characteristics

11.1 LCM Outline Dimension

Front view

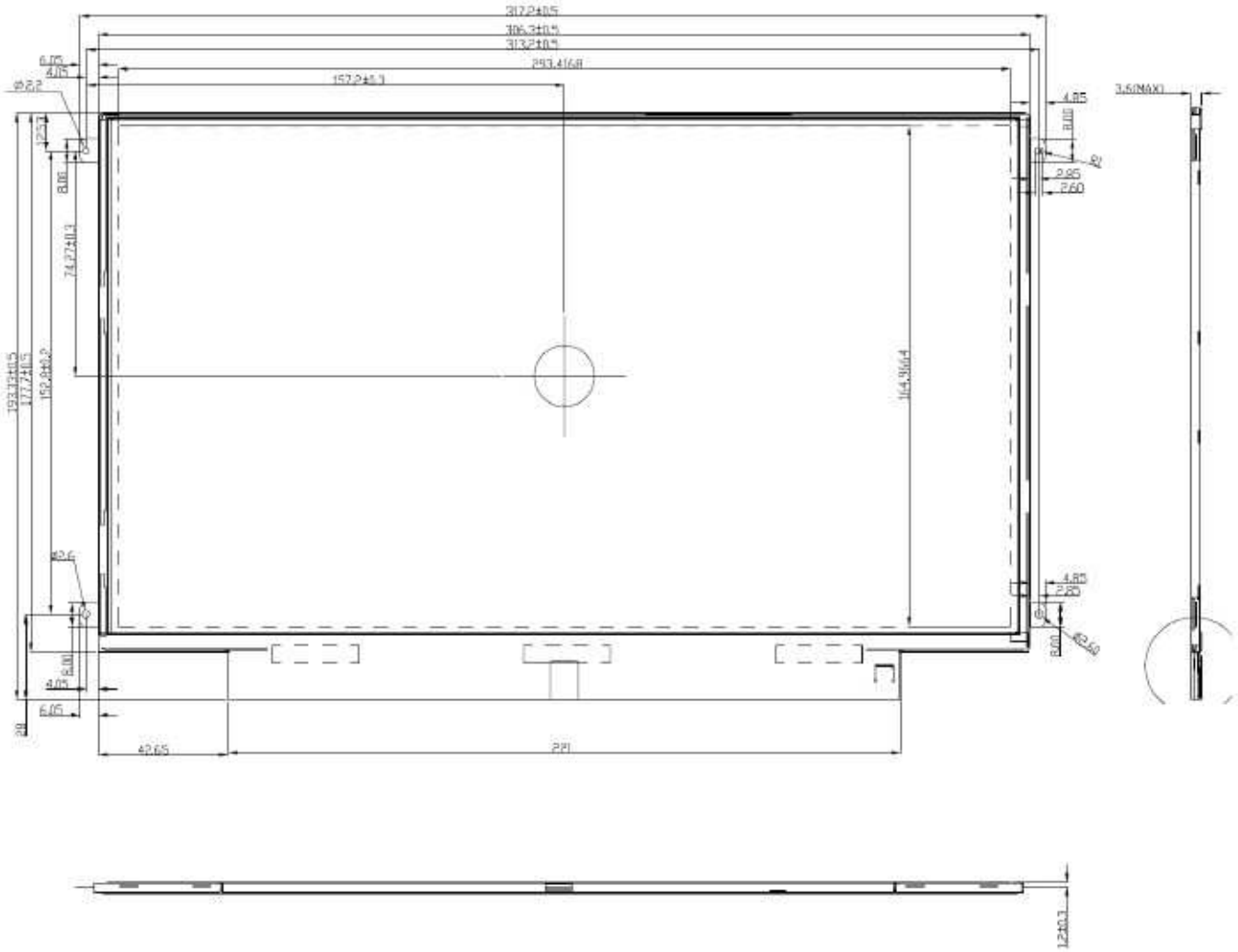

Rear view

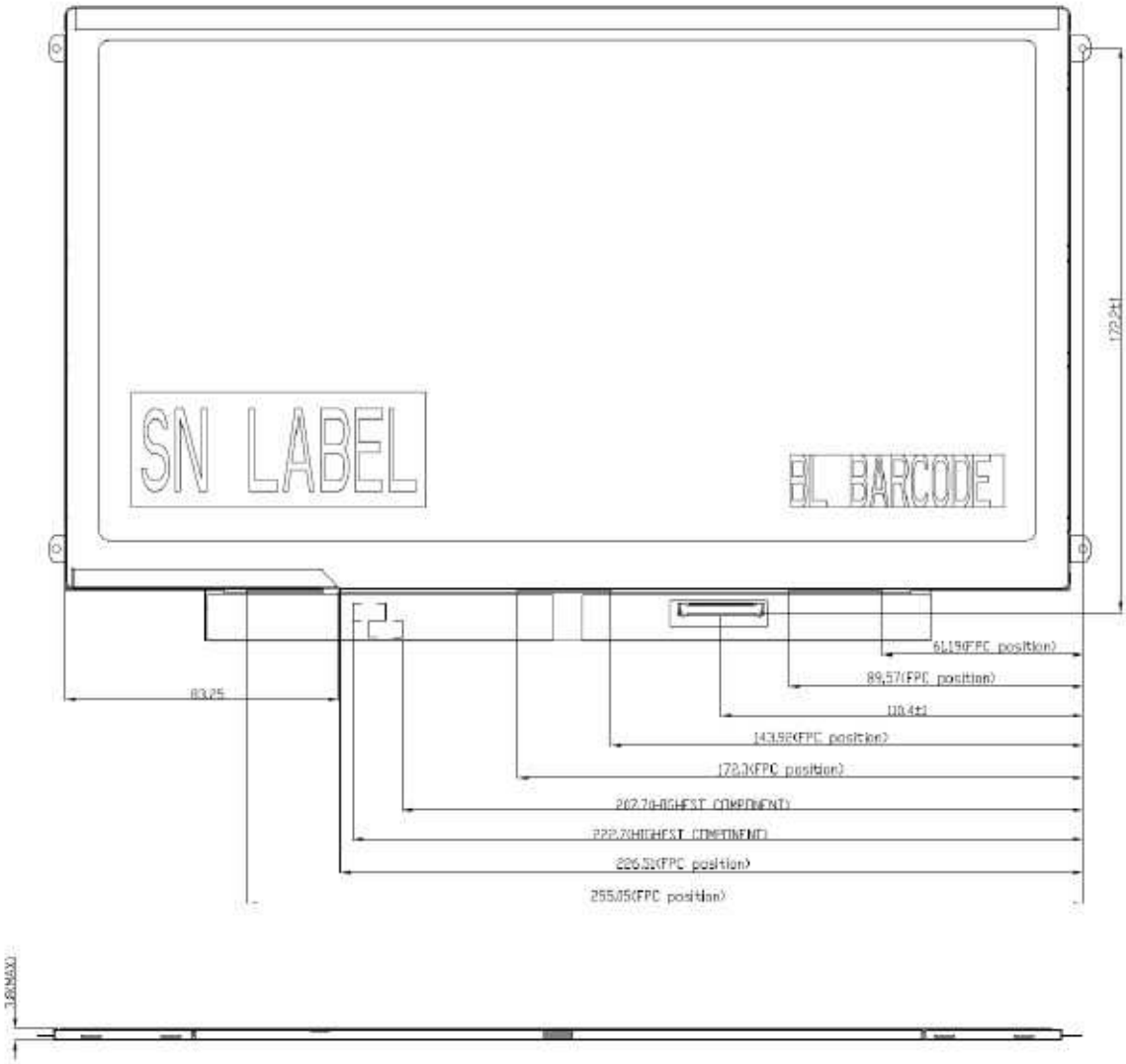

12. Shipping and Package

12.1 Shipping Label Format

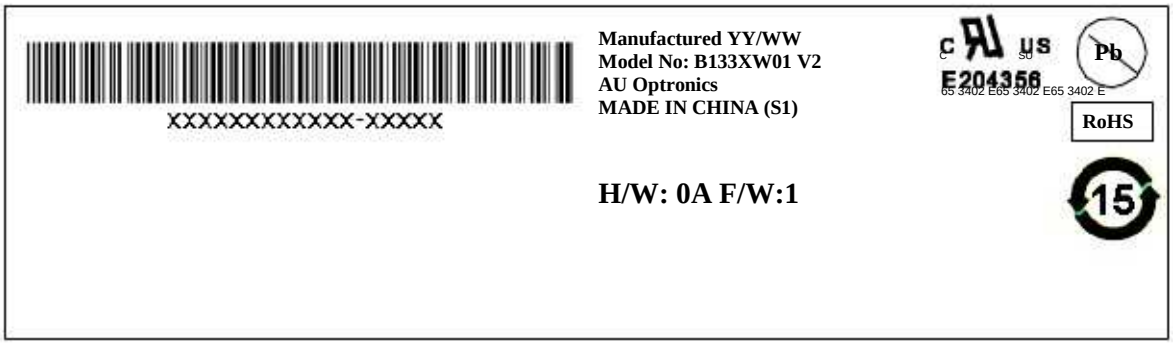

12.2 Carton package

The outside dimension of carton: 437 (L) mm x 359 (W) mm x 285 (H) mm

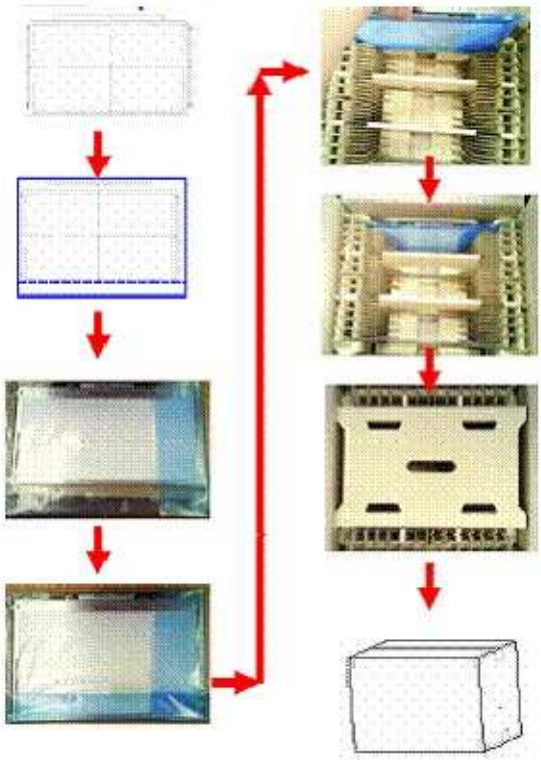

12.3 Shipping package of palletizing sequence

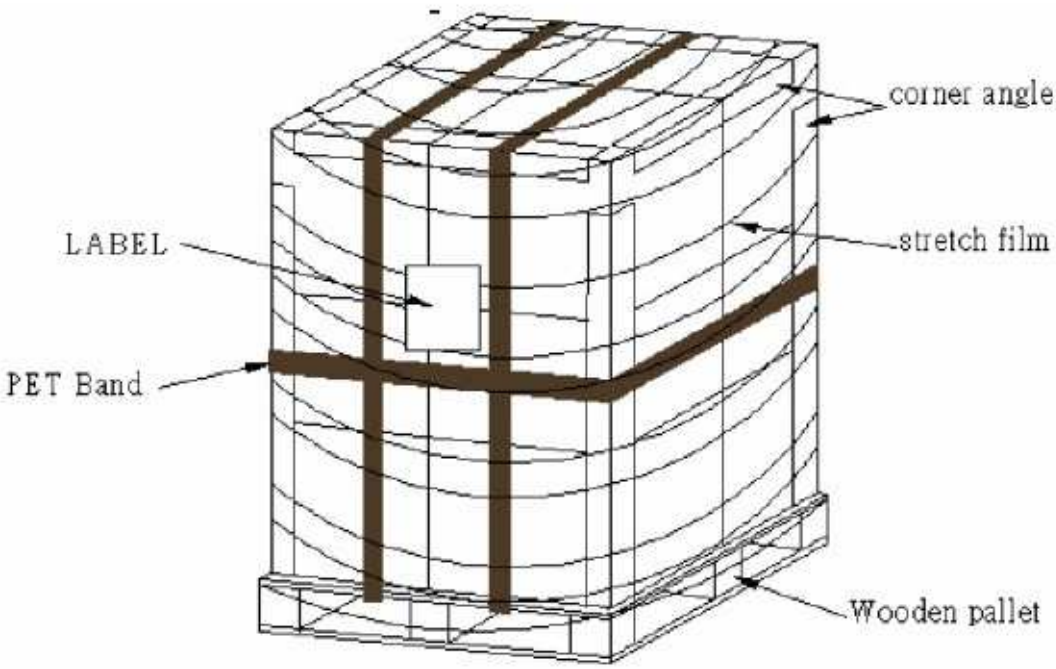

13. Appendix: EDID description

Address	FUNCTION	Value	Value	Value	Note
HEX		HEX	BIN	DEC	
00	Header	00	00000000	0	
01		FF	11111111	255	
02		FF	11111111	255	
03		FF	11111111	255	
04		FF	11111111	255	
05		FF	11111111	255	
06		FF	11111111	255	
07		00	00000000	0	
08	EISA Manuf. Code LSB	06	00000110	6	
09	Compressed ASCII	AF	10101111	175	
0A	Product Code	2C	00101100	44	
0B	tsrif BSL ,xeh edoC-tcudorP	12	00010010	18	
0C	32-bit ser #	00	00000000	0	
0D		00	00000000	0	
0E		00	00000000	0	
0F		00	00000000	0	
10	Week of manufacture	01	00000001	1	
11	Year of manufacture	12	00010010	18	
12	EDID Structure Ver.	01	00000001	1	
13	EDID revision #	03	00000011	3	
14	**Video input def.** (digital I/P, non-TMDS, CRGB)	80	10000000	128	
15	**Max H image size** (rounded to cm)	1D	00011101	29	
16	**Max V image size** (rounded to cm) **Display Gamma**(=(gamma*100)-100)	10	00010000	16	
17	**Feature support** (no DPMS, Active OFF, RGB, tmg Blk#1)	78	01111000	120	
18	Red/green low bits **(Lower 2:2:2:2 bits)** Blue/white low bits **(Lower 2:2:2:2 bits)**	0A	00001010	10	
19	Red x **(Upper 8 bits)**	F9	10111010	186	
1A		D5	01100101	101	
1B		95	10011011	155	
1C	Red y/ highER 8 bits	55	01011001	89	
1D	Green x	54	01010100	84	
1E	Green y	93	10011110	158	
1F	Blue x	27	00100110	38	
20	Blue y	21	00011010	26	
21	White x	50	01001101	77	
22	White y	54	01010010	82	
23	Established timing 1	00	00000000	0	
24	Established timing 2	00	00000000	0	
25	Established timing 3	00	00000000	0	
26	Standard timing #1	01	00000001	1	
27		01	00000001	1	
28	Standard timing #2	01	00000001	1	
29		01	00000001	1	
2A	Standard timing #3	01	00000001	1	
2B		01	00000001	1	
2C	Standard timing #4	01	00000001	1	
2D		01	00000001	1	

2E	Standard timing #5	01	00000001	1	
2F		01	00000001	1	
30	Standard timing #6	01	00000001	1	
31		01	00000001	1	
32	Standard timing #7	01	00000001	1	
33		01	00000001	1	
34	Standard timing #8	01	00000001	1	
35		01	00000001	1	
36	Pixel Clock/10000 LSB	20	00100000	32	
37	Pixel Clock/10000 USB	1C	00011100	28	
38	Horz active **Lower 8bits** Horz blanking **Lower 8bits**	56	01010110	86	
39	HorzAct:HorzBlnk**Upper 4:4 bits**	80	10000000	128	
3A	Vertical Active **Lower 8bits** Vertical Blanking **Lower 8bits**	50	01010000	80	
3B	Vert Act : Vertical Blanking**(upper 4:4 bit)**	00	00000000	0	
3C	HorzSync. Offset HorzSync.Width	23	00100011	35	
3D	VertSync.Offset : VertSync.Width	30	00110000	48	
3E		30	00110000	48	
3F		20	00100000	32	
40		36	00110110	54	
41	Horz&Vert Sync Offset/Width **Upper 2bits**	00	00000000	0	
42	Horizontal Image Size **Lower 8bits**	25	00100101	37	
43	Vertical Image Size **Lower 8bits**	A4	10100100	164	
44	Horizontal & Vertical Image Size **(upper 4:4 bits)**	10	00010000	16	
45	Horizontal Border (zero for internal LCD)	00	00000000	0	
46	Vertical Border (zero for internal LCD)	00	00000000	0	
47	Signal (non-intr, norm, no stero, sep sync, neg pol)	18	00011000	24	
48	Detailed timing/monitor	00	00000000	0	
49	descriptor #2	00	00000000	0	
4A		00	00000000	0	
4B		0F	00001111	15	
4C		00	00000000	0	
4D		00	00000000	0	
4E		00	00000000	0	
4F		00	00000000	0	
50		00	00000000	0	
51		00	00000000	0	
52		00	00000000	0	
53		00	00000000	0	
54		00	00000000	0	
55		00	00000000	0	
56		00	00000000	0	
57		00	00000000	0	
58		00	00000000	0	
59		20	00100000	32	
5A	Detailed timing/monitor	00	00000000	0	
5B	descriptor #3	00	00000000	0	
5C		00	00000000	0	
5D		FE	11111110	254	
5E		00	00000000	0	

5F	Manufacture	41	01000001	65	A
60	Manufacture	55	01010101	85	U
61	Manufacture	4F	01001111	79	O
62		0A	00001010	10	
63		20	00100000	32	
64		20	00100000	32	
65		20	00100000	32	
66		20	00100000	32	
67		20	00100000	32	
68		20	00100000	32	
69		20	00100000	32	
6A		20	00100000	32	
6B		20	00100000	32	
6C	Detailed timing/monitor	00	00000000	0	
6D	descriptor #4	00	00000000	0	
6E		00	00000000	0	
6F		FE	11111110	254	
70		00	00000000	0	
71	Manufacture P/N	42	01000010	66	B
72	Manufacture P/N	31	00110001	49	1
73	Manufacture P/N	33	00110011	51	3
74	Manufacture P/N	33	00110011	51	3
75	Manufacture P/N	58	01011000	88	X
76	Manufacture P/N	57	01010111	87	W
77	Manufacture P/N	30	00110000	48	0
78	Manufacture P/N	31	00110001	49	1
79	Manufacture P/N	20	00100000	32	
7A	Manufacture P/N	56	01010110	86	V
7B	Manufacture P/N	32	00110010	50	2
7C		20	00100000	32	
7D		0A	00001010	10	
7E	Extension Flag	00	00000000	0	
7F	Checksum	11	10111000	184	